SS-CNP760/CRP760/MSP760L/MSP760R/ MSP760SL/MSP760SR

SERVICE MANUAL

Canadian Model
AEP Model
UK Model
E Model
Australian Model

Ver 1.1 2004.07

SS-CNP760

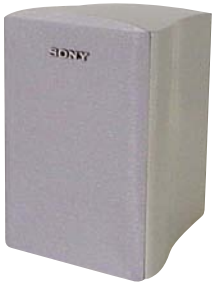

SS-MSP760L/MSP760R/
MSP760SL/MSP760SR

- SS-CRP760 is the speaker section in HT-DDW760.
  SS-CNP760 is the speaker section in HT-4800DP.

- SS-CRP760 is composed of following models.

PACKAGE Speaker		SS-CRP760
	Front Speaker	SS-MSP760L/SS-MSP760R
	Center Speaker	SS-CNP760
	Surround Speaker	SS-MSP760SL/SS-MSP760SR

SPECIFICATIONS

Speaker section
Front speakers (SS-MSP760L/ SS-MSP760R)
Center speaker (SS-CNP760)
Surround speakers (SS-MSP760SL/ SS-MSP760SR)

Front/center speakers	Full range, magnetically shielded
Surround speakers	Full range
Speaker units	80 mm cone type
Enclosure type	Bass reflex
Rated Impedance	6 ohms
Dimension (w/h/d) (Approx.)	
Front/surround speakers	102 × 150 × 126 mm (4 × 6 × 5 inches)
Center speaker	225 × 102 × 126 mm (8 7/8 × 4 × 5 inches)
Mass (Approx.)	
Front speakers	0.8 kg (1 lb 13 oz)
Center speaker	1.0 kg (2 lb 4 oz)
Surround speakers	0.7 kg (1 lb 9 oz)

SPEAKER SYSTEM

9-877-669-02
2004G16-1
© 2004.07

Sony Corporation
Home Audio Company
Published by Sony Engineering Corporation

SONY®

EXPLODED VIEWS

NOTE:

- The mechanical parts with no reference number in the exploded views are not supplied.
- -XX and -X mean standardized parts, so they may have some difference from the original one.

SS-CNP760

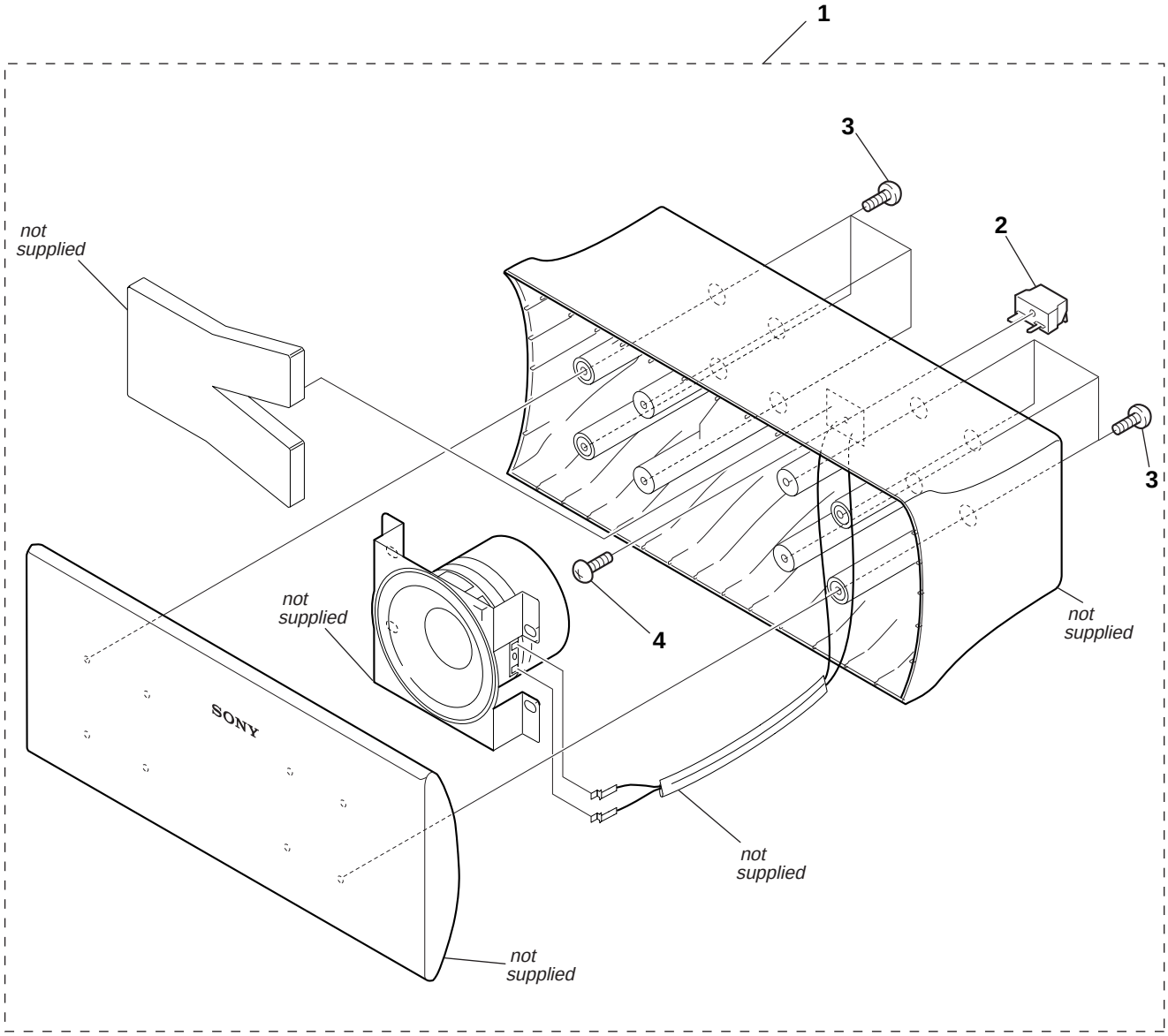

Ref. No.	Part No.	Description	Remark
1	A-4713-761-A	OVERALL ASSY	
2	1-694-516-11	TERMINAL, SPEAKER	
3	4-246-231-01	SCREW (3.5X14)	
4	4-986-971-02	SCREW (3.5)	

SS-MSP760L/MSP760R/MSP760SL/MSP760SR

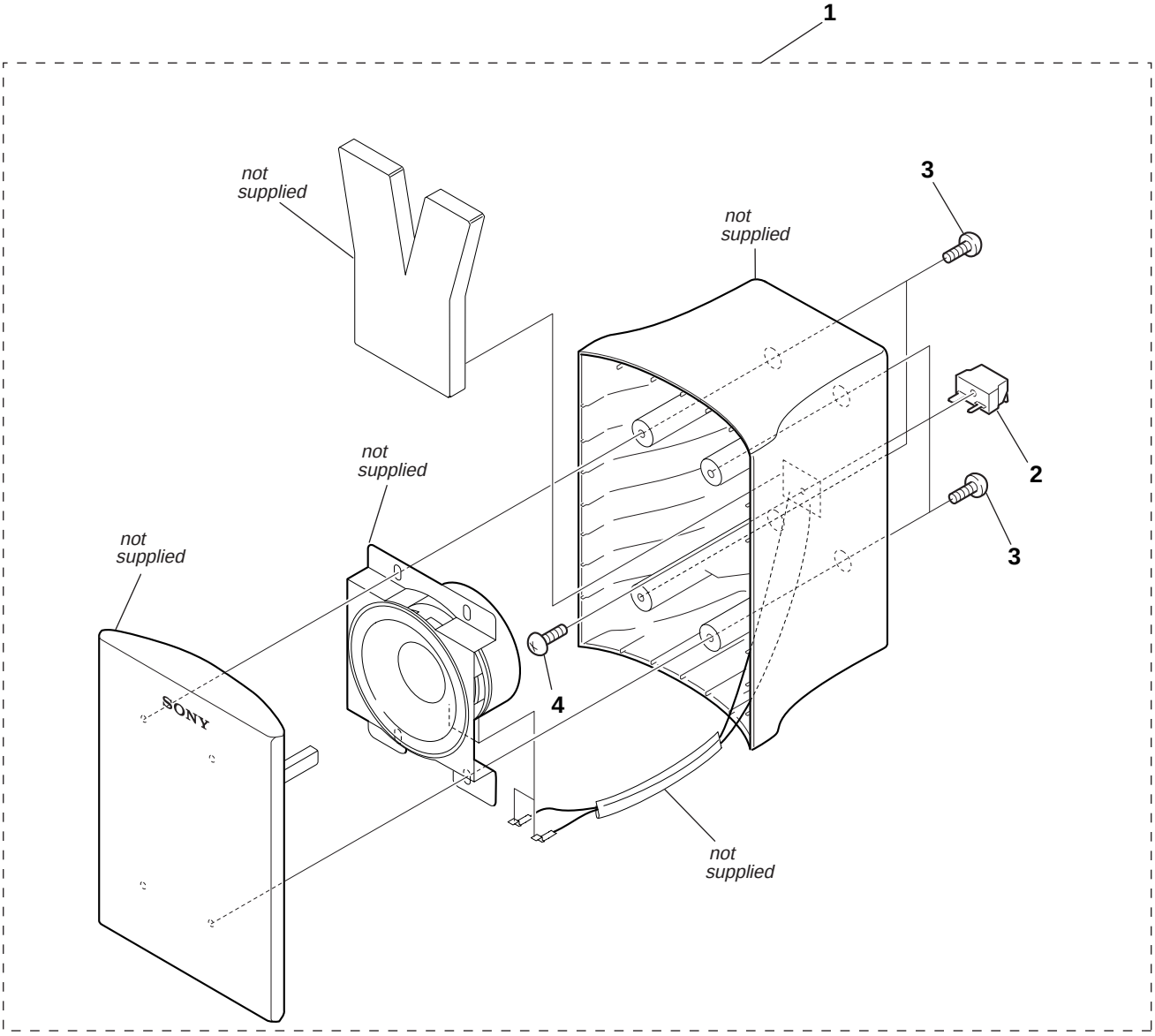

Ref. No.	Part No.	Description	Remark
1	A-4713-765-A	OVERALL ASSY	
2	1-694-516-11	TERMINAL, SPEAKER	
3	4-246-231-01	SCREW (3.5X14)	
4	4-986-971-02	SCREW (3.5)	

REVISION HISTORY

Clicking the version allows you to jump to the revised page.
Also, clicking the version at the upper right on the revised page allows you to jump to the next revised page.

Ver.	Date	Description of Revision
1.0	2004.03	New
1.1	2004.07	Addition of HT-4800DP to 1-page note (SPM-04067)